ROHL

Authentic Luxury for Kitchen and Bath®

www.rohlhome.com

PERRIN & ROWE® 3-HOLE TUBULAR C-SPOUT WIDESPREAD LAVATORY FAUCET

Perrin & Rowe®

U.3955LS-2 (Lever Handles)

FEATURES

- Limited rotation spout
- Spout, valve housing, handles and pop-up made from solid brass
- 6" spout reach
- 3 x 1 3/8" hole cutouts
- 1/4-turn ceramic disc valves
- Unique handle fixing clip, engineered to increase the life of the valve
- Innovative valve hose connection, complete with flexible stainless steel hose
- Pop-up drain, 1 1/4" pipe
- 1.5 GPM
- 1/2" NPSM connections

COLORS/FINISHES

- Polished Chrome
- Polished Nickel
- Satin Nickel

WARRANTY

- Limited Lifetime

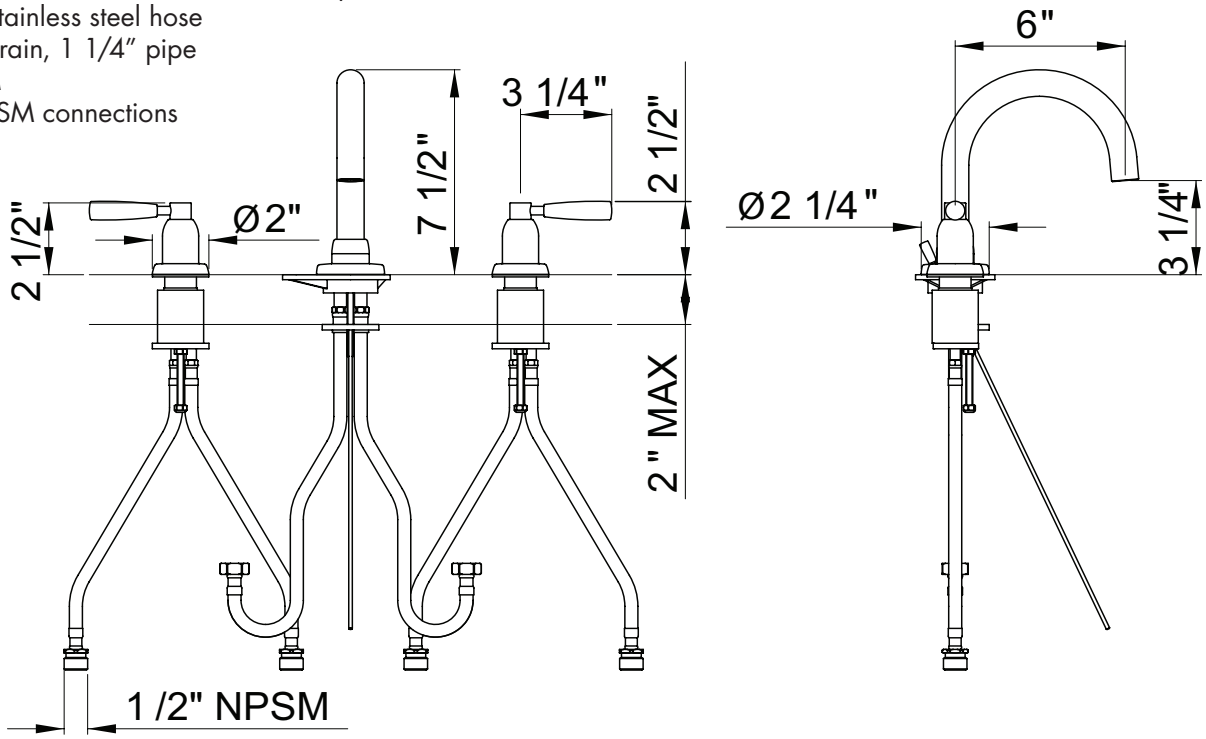

Consult your local ROHL showroom for additional information and specifications. For complete warranty details and a list of showrooms, go to www.rohlhome.com.